Steady states for predator-prey model with diffusion and indirect prey-taxis..

Dariusz WRZOSEK
Institute of Applied Mathematics and Mechanics
University of Warsaw

June. 19, 2017
Emerging issues in nonlinear elliptic equations: singularities, singular perturbations and non local problems

The talk is based on a joint work with
Jose Ignacio Tello and Arturo Hidalgo (Politecnica de Madrid)

Inter-species interactions

u,v – densities of two species

$$\begin{aligned} u_t &= f(u\,,v), \\ v_t &= g(u\,,v) \end{aligned}$$

$u(0) = u_0 > 0\,, v(0) = v_0 > 0$

Reaction diffusion system in $\Omega \times (0\,,\infty)$

$$\begin{aligned} u_t &= div(d_u \nabla u) + f(u\,,v), \\ v_t &= div(d_v \nabla v) + g(u\,,v) \end{aligned}$$

$u(0) = u_0 > 0\,, v(0) = v_0 > 0$ + boundary cond. on $\partial\Omega \times (0\,,\infty)$

Chemical signalling I

We extend the model of interspecies interactions by taking into account the case of chemical signalling.

- individuals of one population e.g predator detect an olfactory and diffusive chemical (chemical signal) which is released by prey.
- the gradient of concentration of the chemical indicates the direction of increasing prey density.

Chemical signalling I

We extend the model of interspecies interactions by taking into account the case of chemical signalling.

- individuals of one population e.g predator detect an olfactory and diffusive chemical (chemical signal) which is released by prey.
- the gradient of concentration of the chemical indicates the direction of increasing prey density.

Chemical signalling II

w -density of some chemical produced by species v We consider in $\Omega \times (0\,,\infty)$

$$\begin{aligned} u_t &= div(d_u \nabla u - \chi u \nabla w) + f(u\,,v)\,, \\ w_t &= d_w \Delta w - \lambda w + \alpha v\,, \\ v_t &= div(d_v \nabla v) + g(u\,,v)\,, \end{aligned}$$

$u(0) = u_0 > 0\,, v(0) = v_0 > 0$ + boundary cond. on $\partial\Omega \times (0\,,\infty)$

Keller-Segel('70) model of chemotaxis

Chemical signal is released and detected by individuals of the same population.

Self- attraction;—-blow –up versus global-in-time existence of solutions

$$
\begin{aligned}
u_t &= div(\{d_u \nabla - / + u \nabla w\}, \\
w_t &= d_w \Delta w - \lambda w + \alpha u,
\end{aligned}
$$

chemotaxis

chemorepulsion

Predator-prey model,

Logistic equation for prey

$v(t)$ – population density at time $t \geq 0$
λ- birth rate
K –caring capacity

$$v_t = \lambda v(t)\left(1 - \frac{v(t)}{K}\right)$$

F - consumption rate (mortality)

$$v_t = \lambda v(t)\left(1 - \frac{v(t)}{K}\right) - Fv(t)$$

If $\lambda > F$ there is the unique stable steady state

$$\bar{v} = K\left(1 - \frac{F}{\lambda}\right)$$

Two Models of indirect prey taxis (IPT)

Predator searching strategy is the superposition of random dispersion and directed movement towards the gradient of some chemical:

Model IPT1: released by injured prey during capturing.

Model IPT2: released by prey itself ”smell of prey”.

J.I Tello, D.W, Predator-prey model with diffusion and indirect taxis., *Mathematical Models and Methods in Applied Sciences*, 2016.

Model IPT1

u–predator density
v–prey density
w– chemical released by injured prey (chemoattractant)

non-dimesionalized version of IPT1 model:

$$
\begin{aligned}
u_t &= \Delta u - div(\chi u \nabla w), && x \in \Omega,\ t > 0 \\
w_t &= d_w \Delta w - w + \alpha v F(u), && x \in \Omega,\ t > 0 \\
v_t &= \lambda v(1 - v) - vF(u), && x \in \Omega,\ t > 0
\end{aligned}
$$

with mortality of prey caused by predator

$$F(u) = \frac{F_m u}{1 + u}$$

no-flux boundary conditions
and nonnegative initial data

Model IPT2

w– chemical released by prey ”smell of prey”’(chemoattractant)

$$
\begin{aligned}
u_t &= \Delta u - div(\chi u \nabla w), && x \in \Omega,\ t > 0 \\
w_t &= d_w \Delta w - \mu w + \alpha v, && x \in \Omega,\ t > 0 \\
v_t &= \lambda v(1 - v) - vF(u), && x \in \Omega,\ t > 0
\end{aligned}
$$

Existence of solutions

$$W_N^{2,p}(\Omega) = \{w \in W_N^{2,p}(\Omega) : \frac{\partial w}{\partial \nu}(x) = 0\,,\ x \in \partial\Omega\}$$

Theorem

Assume that initial functions are nonnegative and for $p > n$, $u_0\,, v_0\,, \in W^{1,p}(\Omega)$ and $w_0 \in W_N^{2,p}(\Omega)$. Then there exist a unique solution $(u\,, w\,, v)$ to IPT models such that

$$u\,, v \in C([0\,,\infty); W^{1,p}) \quad \textit{and} \ \ w \in C([0\,,\infty); W_N^{2,p})\,.$$

Moreover, for any $T > 0$, $u\,, w \in C^{2,1}_{x,t}(\Omega \times (0\ T))$ and

$$u, w, v \geq 0 \quad \textit{on} \quad \Omega \times (0\ T).$$

Proof is based on Banach fixed point theorem applied for integral formulation of the problem and theory of analytical semigroups.

Steady states and linearization

It follows from the non-flux boundary condition that

$$\langle u(t)\rangle := \frac{1}{|\Omega|}\int_\Omega u(x,t)dx = \langle u_0\rangle := \frac{M}{|\Omega|}, \quad \text{for} \quad t > 0.$$

If $F(\bar{u}) < \lambda$ in each of the models there is only one constant steady state with positive components:
for IPT1; $P_1^1 = (\bar{u}\,, \bar{w}\,, \bar{v})$ with

$$\bar{u} = \langle u_0\rangle\ , \bar{w} = \frac{\alpha}{\mu}\left(1 - \frac{F(\bar{u})}{\lambda}\right)F(\bar{u}), \bar{v} = 1 - \frac{F(\bar{u})}{\lambda}\,,$$

for IPT2; $P_1^2 = (\bar{u}\,, \bar{w}\,, \bar{v})$

$$\bar{u} = \langle u_0\rangle\,,\ \bar{w} = \frac{\alpha}{\mu}\left(1 - \frac{F(\bar{u})}{\lambda}\right), \bar{v} = 1 - \frac{F(\bar{u})}{\lambda}.$$

Trivial steady state

There is also a trivial steady state P_0 for both models:

$$\bar{u} = \langle u \rangle \, , \; \bar{w} = \bar{v} = 0 \, .$$

which is a unique space homogeneous steady state provided $F(\langle u_0 \rangle) \geq \lambda$.

Linearization and the eigenvalue problem

Linearization at a homogeneous steady state $(\bar{u}\,,\bar{w}\,,\bar{v})$ to Model IPT1 leads to the following eigenvalue problem

$$\begin{aligned} \Delta\varphi - \chi\bar{u}\Delta\psi &= \sigma\varphi, \\ d_w\Delta\psi - \mu\psi + \alpha\bar{v}F'(\bar{u})\varphi + \alpha F(\bar{u})\eta &= \sigma\psi, \\ -\bar{v}F'(\bar{u})\varphi + (F(\bar{u}) - \lambda)\eta &= \sigma\eta \end{aligned}$$

where $(\phi\,,\psi\,,\eta) \in X_0 \times X \times Y$ and

$$\begin{aligned} X_0 = &\quad \{\varphi \in W^{2,p}(\Omega) \quad : \frac{\partial\phi}{\partial\nu} = 0\,, \int_\Omega \phi(x)dx = 0\}\,, \\ X = &\quad \{\varphi \in W^{2,p}(\Omega) \quad : \frac{\partial\psi}{\partial\nu} = 0\}\,, \quad Y = L^2(\Omega)\,. \end{aligned}$$

Spectrum

Let $\{\lambda_n\}_{n=0}^{\infty}$ be the sequence of eigenvalues of operator $-\Delta$ with homogeneous Neumann boundary conditions defined on X

$$0 = \lambda_0 < \lambda_1 \leq \lambda_2 \leq \lambda_3 \leq \dots .$$

and $\{w_n\}_{n=0}^{\infty}$ the corresponding system of orthonormal eigenfunctions in $L^2(\Omega)$. Let us define matrix

$$A_n = \begin{bmatrix} -\lambda_n & \chi\bar{u}\lambda_n & 0 \\ \alpha\bar{v}f_1 & -(d_w\lambda_n + \mu) & -\alpha f \\ \bar{v}f_2 & 0 & r \end{bmatrix}$$

where $f = F(\bar{u})$, $r = \lambda - f - 2\bar{v}\lambda$ and $f_1 = f_2 = F'(\bar{u})$ in Model IPT1 and $f_1 = 0$, $f_2 = F'(\bar{u})$ in the case of Model IPT2.

Proposition

A complex number σ is an eigenvalue to the linearized system iff there exists $n \geq 1$ such that σ is an eigenvalue of matrix A_n or for $n = 0$, $\sigma \in \{-\mu, r\}$. Moreover spectrum of the linear operator consist only of eigenvalues.

Stability criterion

Theorem

Steady state P_1^1 in Model IPT1 is locally asymptotically stable if

$$\frac{\chi\alpha\bar{u}F'(\bar{u})}{\lambda} < (1+d_w)\min\left(\frac{2\mu}{\mu+F(\bar{u})}, 1\right).$$

Steady state P_1^2 in Model IPT2 is locally asymptotically stable if

$$\frac{\chi\alpha\bar{u}F'(\bar{u})}{\lambda} < (1+d_w)\frac{2\mu}{F(\bar{u})}.$$

In each of the above cases there exists $\delta_0 > 0$ such that if σ is an eigenvalue to A_n then $\mathrm{Re}\,\sigma < -\delta_0 < 0$.
Steady state P_0 is unstable provided $\lambda \geq F(\bar{u})$. There is $K > 0$ such that steady states P_1^1 and P_1^2 are unstable provided

$$\frac{\chi\alpha\bar{u}}{\lambda} > K.$$

Non-constant steady states and reduced system

The stationary problem for IPT1 may be reduced to the system of two elliptic equations:

$$\begin{aligned} \Delta u - div(u\chi\nabla w) &= 0, && x \in \Omega, \\ d_w \Delta w - \mu w + \alpha \left(1 - \frac{F(u)}{\lambda}\right) F(u) &= 0, && x \in \Omega\,. \end{aligned}$$

with homogeneous Neumann boundary conditions.

linearization of the reduced system

Let us denote

$$\Gamma(u) = \left(1 - \frac{F(u)}{\lambda}\right) F(u)$$

and

$$\gamma := \Gamma'(\bar{u}) = \left(1 - \frac{2F(\bar{u})}{\lambda}\right) F'(\bar{u}).$$

Linearization at the constant steady state $(\bar{u}\,, \bar{w})$ leads to the following eigenvalue problem (**L**)

$$\begin{aligned} \Delta\phi - \chi\bar{u}\Delta\psi &= \sigma\phi, \\ d_w\Delta\psi - \mu\psi + \alpha\gamma\phi &= \sigma\psi\,. \end{aligned}$$

Linearization

Let us define matrix

$$B_n = \begin{bmatrix} -\lambda_n\,, & \chi\bar{u}\lambda_n \\ \alpha\gamma\,, & -\lambda_n d_w - \mu \end{bmatrix}$$

Proposition

A complex number σ is an eigenvalue iff there exists $n \geq 1$ such that σ is the eigenvalue to matrix B_n or $\sigma = -\mu$.. Moreover, $\mathrm{Re}\,\sigma < 0$ *iff*

$$\lambda_1 > \frac{\alpha\gamma\chi\bar{u} - \mu}{d_w}\,.$$

Bifurcation

If $\gamma > 0$ then it is convenient to choose χ as a bifurcation parameter and then we obtain the stability condition for the reduced problem

$$\chi < \chi_1 := \frac{\lambda_1 d_w + \mu}{\gamma \alpha \bar{u}} .$$

Proposition

Assume 1-D case and $\gamma > 0$, $M > 0$. Then for any $\chi > \chi_1$ there are non-constant steady states with the mass M.

we adapt result by Xuefeng Wang and Quian XU (2013)

Bifurcation

Bifurcation theory is applied to mapping
$\Psi : X^2 \times \mathbb{R} \mapsto Y_0 \times Y \times \mathbb{R}$

$$\Psi(u, w; \chi) = \begin{pmatrix} div(\nabla u - u\chi\nabla v) \\ d_w \Delta w - \mu w + \alpha \left(1 - \frac{F(u)}{\lambda}\right) F(u) \\ \int_\Omega u(x)dx - |\Omega|\bar{u} \end{pmatrix}$$

and we consider equation

$$\Psi(u, w; \chi) = 0$$

knowing that

$$\Psi(\bar{u}, \bar{w}; \chi) = 0$$

Comparison of models IPT1 and IPT2

The constant solution to the reduced problem (IPT2) is uniquely determined. Indeed

$$div\{u\nabla(\ln u - \chi w)\} = 0$$

thus there is $\varrho > 0$ such that

$$u = \varrho e^{\chi w}\,.$$

Then any non-zero steady state satisfies the following semilinear elliptic equation

$$-\Delta w + \mu w + R(w) = 0 \quad \text{on} \quad \Omega$$

with no-flux boundary condition and

$$R(w) = \alpha(\frac{F(\varrho e^{\chi w})}{\lambda} - 1)$$

Uniqueness of solutions results from the fact that

$$w \longmapsto \mu w + R(w)$$

is a strictly increasing function and classical arguments for

Stabilization of solutions

Assumptions :

$$\lambda > F_m,$$

there exists a positive constant $\underline{v}_0 > 0$ such that the initial data v_0 satisfies

$$\underline{v}_0 \leq v_0(x) \leq 1$$

$$w_0(x) \geq 0\,,$$

$$M < \frac{2^7}{3^3}\left(\frac{\chi^2\alpha^2 F_m^2|\Omega|^2}{2d_w}\left(1+\frac{F_m^2}{\lambda\min\{\lambda\underline{v}_0,(\lambda-F_m)\}}\right)\right)^{-1}.$$

Stabilization of solutions

Theorem

Under assumptions above if $\Omega \subset \mathbb{R}^2$ is a bounded domain

$$
\begin{aligned}
u(\cdot,t) &\longrightarrow \quad \bar{u} = \frac{1}{|\Omega|}\int_\Omega u && \text{in } L^2(\Omega) \text{ as } t \to \infty,\\
v(\cdot,t) &\longrightarrow \quad \bar{v} = 1 - \frac{1}{\lambda}F(\bar{u}) && \text{in } L^p(\Omega) \text{ as } t \to \infty,\\
w(\cdot,t) &\longrightarrow \quad \bar{w} = \alpha(1 - \frac{1}{\lambda}F(\bar{u})F(\bar{u}). && \text{in } L^p(\Omega) \text{ as } t \to \infty\,,
\end{aligned}
$$

for any $p \in [1,\infty)$

crucial energy estimate

$$\int_\Omega u(\ln u - 1) + \int_\Omega |\nabla w|^2 + \int_\Omega \left|\frac{\nabla v}{v}\right|^2 + \int_0^\infty \int_\Omega |\nabla w|^2 + \int_0^\infty \int_\Omega \frac{|\nabla u|^2}{1+u} \leq C$$

first step

$$\|u(\cdot,t) - \frac{1}{|\Omega|}\int_\Omega u(x,t)dx\|_p \to 0$$

$$\|v(\cdot,t) - \frac{1}{|\Omega|}\int_\Omega v(x,t)dx\|_p \to 0$$

$$\|w(\cdot,t) - \frac{1}{|\Omega|}\int_\Omega w(x,t)dx\|_p \to 0$$

$$\text{as} \quad t \to +\infty\,.$$

Numerical solutions 1

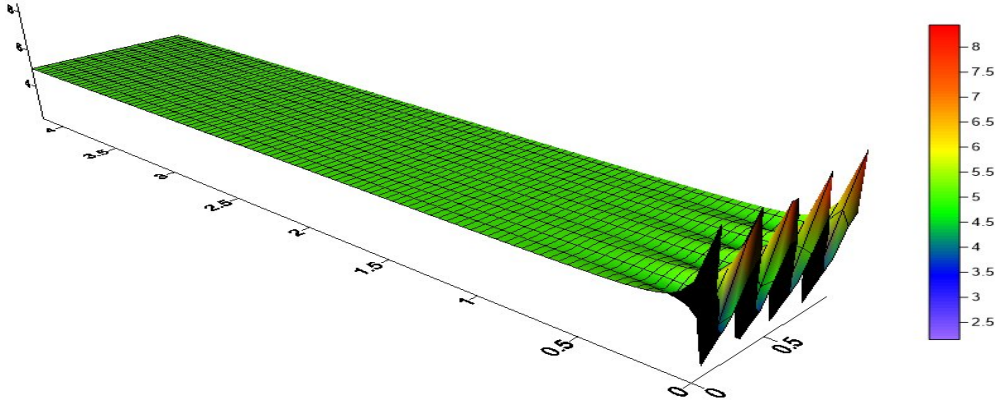

$L = 1\,, \chi = 1, n = 8, d_w = 0.5, d_u = 1, \lambda = 4, k = 1, \alpha = 100$
$u(x,0) = 5 + \cos(n\pi x)\,, \quad w(x,0) = 0\,, v(x,0) =$
$21 + 20\cos(n\pi x)$

Numerical solutions 2

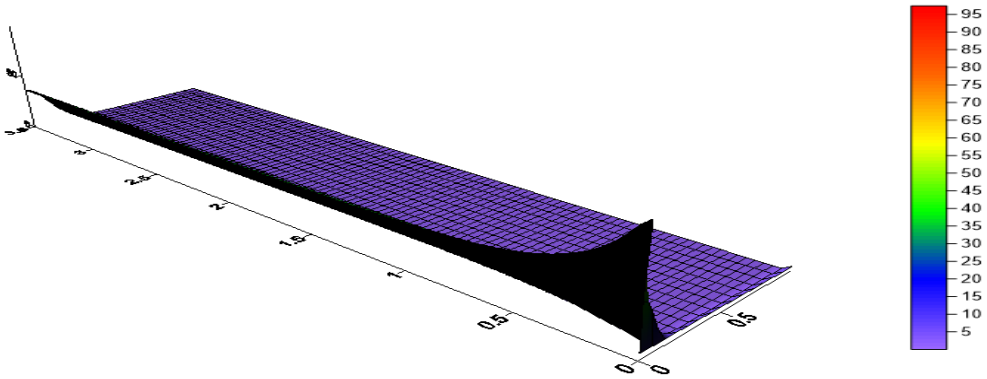

$L = 1\,, \chi = 1, n = 1, d_w = 0.5, d_u = 1, \lambda = 4, k = 1, \alpha = 100$
$u(x, 0) = 5 + \cos(n\pi x)\,, \quad w(x, 0) = 0\,, v(x, 0) =$
$21 + 20\cos(n\pi x)$

Numerical solutions 3

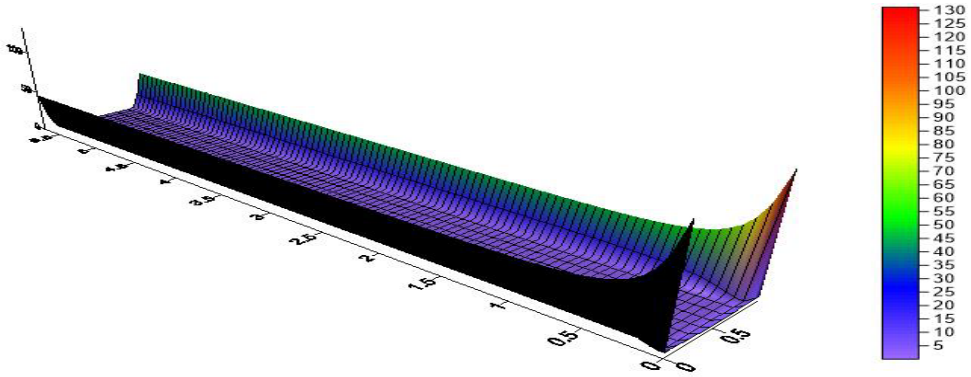

$L = 1\,, \chi = 5, n = 2, d_w = 0.5, d_u = 1, \lambda = 4, k = 1, \alpha = 100$
$u(x,0) = 5 + \cos(n\pi x)\,, \quad w(x,0) = 0\,, v(x,0) =$
$21 + 20\cos(n\pi x)$

Numerical solutions 4

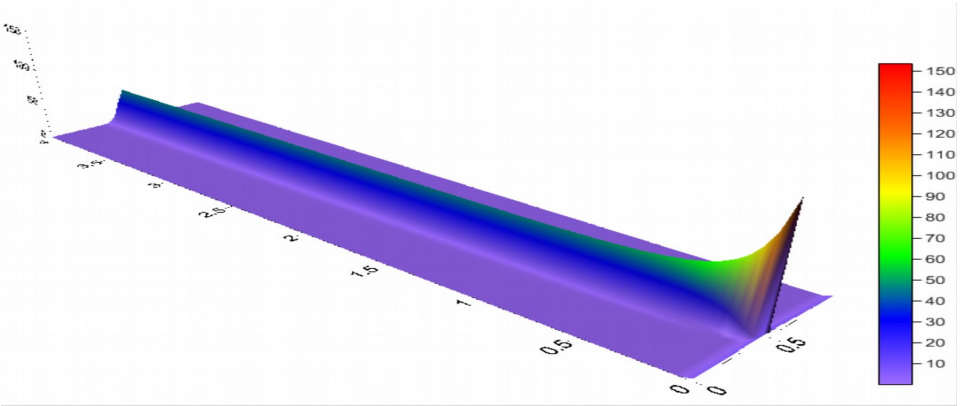

$L = 1\,, \chi = 5, d_w = 0.5, d_u = 1, \lambda = 4, k = 1, \alpha = 100$

Where do the patterns come from?

From the first equation $u = \varrho e^{\chi w}$ and

$$d_w w'' = \mu w - \alpha F(\varrho e^{\chi w}) + \alpha F^2(\varrho e^{\chi w})$$

Suppose for simplicity $F(u) = F_m u$. Then

$$d_w w'' = -\mathcal{U}(w)$$

with potential

$$\mathcal{U}(w) = -\frac{\mu}{2} w^2 + \frac{\alpha F_m \varrho}{\chi} e^{\chi w} - \frac{\alpha F_m^2 \varrho}{2\lambda\chi} e^{2\chi w}$$

For some range of parameters $\mathcal{U}$ has a well.

Where do the patterns come from?